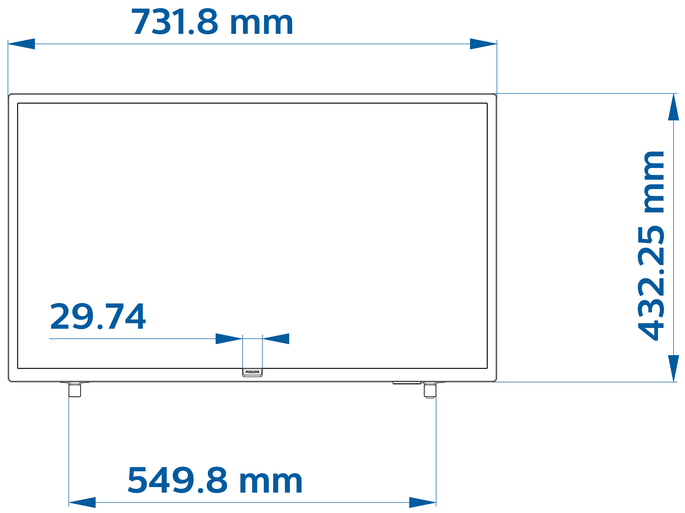
731.8 mm
432.25 mm
29.74
549.8 mm

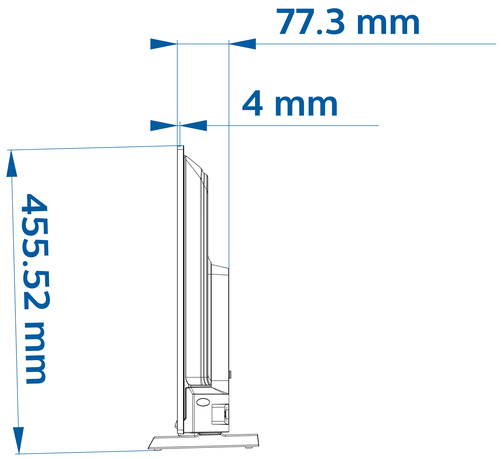
77.3 mm
4 mm
455.52 mm

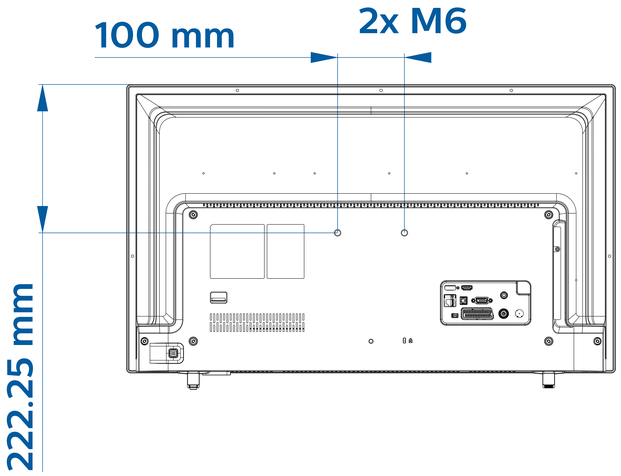
100 mm
2x M6
222.25 mm