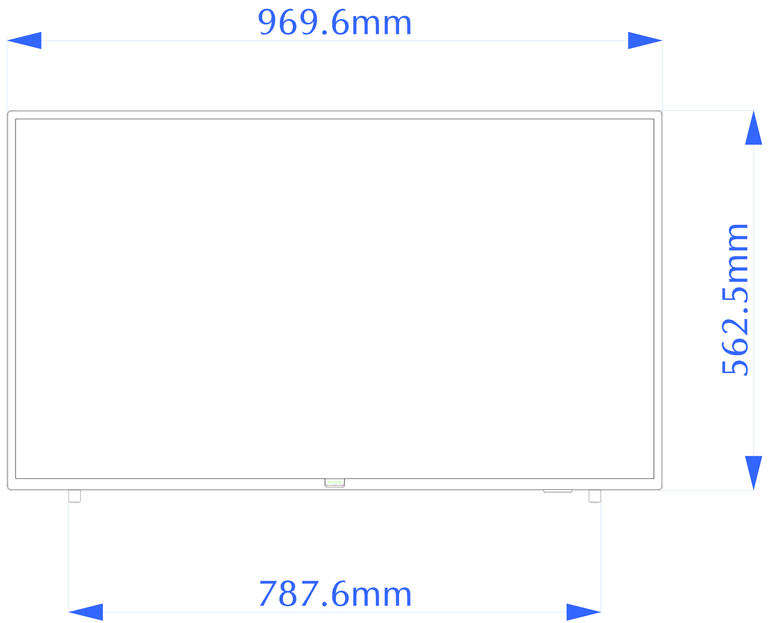
969.6mm
562.5mm
787.6mm

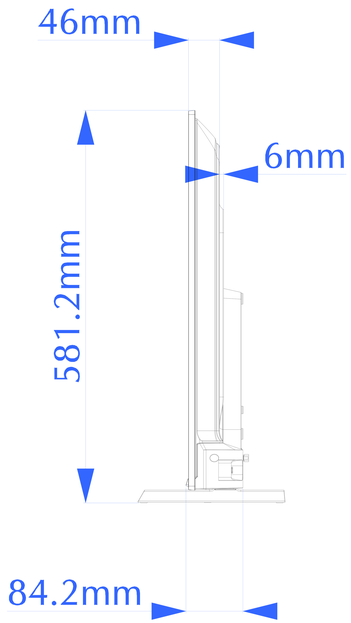
46mm
6mm
581.2mm
84.2mm

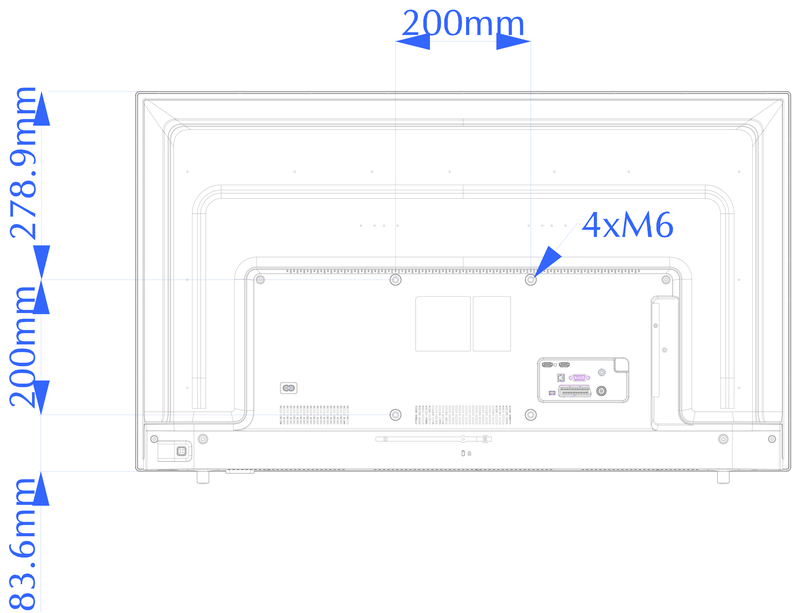
200mm
278.9mm
4xM6
200mm
83.6mm